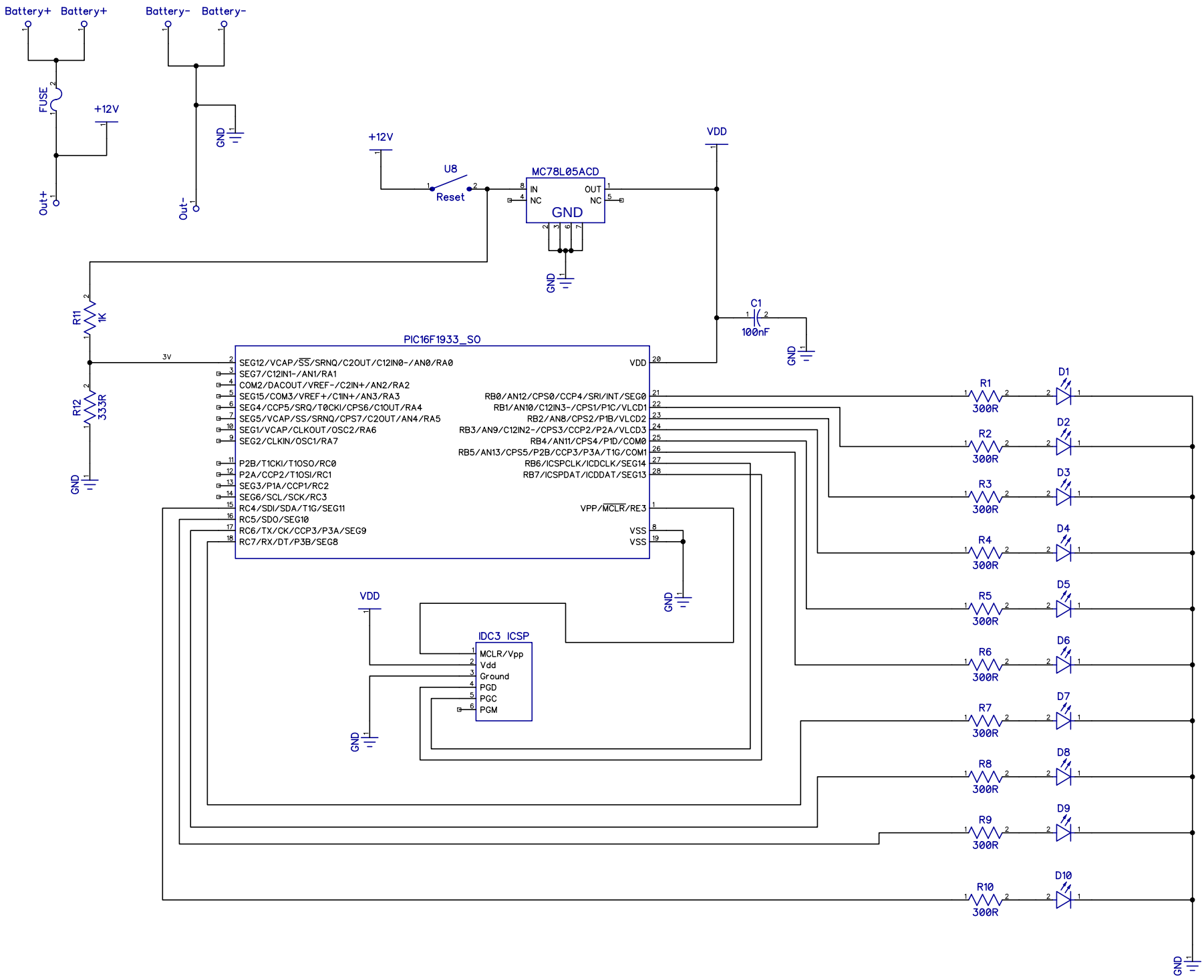
Battery+
Battery+
Battery-
Battery-
FUSE
+12V
GND
Out+
Out-
+12V
U8
Reset
MC78L05ACD
IN
NC
OUT
NC
GND
VDD
C1
100nF
R11
1K
R12
333R
3V
PIC16F1933_SO
SEG12/VCAP/SS/SRNQ/C2OUT/C12IN0-/AN0/RA0
SEG7/C12IN1-/AN1/RA1
COM2/DACOUT/VREF-/C2IN+/AN2/RA2
SEG15/COM3/VREF+/C1IN+/AN3/RA3
SEG4/CCP5/SRQ/T0CKI/CPS6/C1OUT/RA4
SEG5/VCAP/SS/SRNQ/CPS7/C2OUT/AN4/RA5
SEG1/VCAP/CLKOUT/OSC2/RA6
SEG2/CLKIN/OSC1/RA7
P2B/T1CKI/T1OSO/RC0
P2A/CCP2/T1OSI/RC1
SEG3/P1A/CCP1/RC2
SEG6/SCL/SCK/RC3
RC4/SDI/SDA/T1G/SEG11
RC5/SDO/SEG10
RC6/TX/CK/CCP3/P3A/SEG9
RC7/RX/DT/P3B/SEG8
VDD
RB0/AN12/CPS0/CCP4/SRI/INT/SEG0
RB1/AN10/C12IN3-/CPS1/P1C/VLCD1
RB2/AN8/CPS2/P1B/VLCD2
RB3/AN9/C12IN2-/CPS3/CCP2/P2A/VLCD3
RB4/AN11/CPS4/P1D/COM0
RB5/AN13/CPS5/P2B/CCP3/P3A/T1G/COM1
RB6/ICSPCLK/ICDCLK/SEG14
RB7/ICSPDAT/ICDDAT/SEG13
VPP/MCLR/RE3
VSS
VSS
IDC3 ICSP
MCLR/Vpp
Vdd
Ground
PGD
PGC
PGM
R1
300R
R2
300R
R3
300R
R4
300R
R5
300R
R6
300R
R7
300R
R8
300R
R9
300R
R10
300R
D1
D2
D3
D4
D5
D6
D7
D8
D9
D10